Geofísica Internacional (2000), Vol., 39, Num. 1, pp. 127-133

Plasma diagnostic experiments on board of the Brazilian scientific microsatellite SACI-1

P. Muralikrishna, M.A. Abdu, J.H.A. Sobral and Koh-Ichiro Oyama
Instituto Nacional de Pesquisas Espaciais - INPE/MCT, São José dos Campos-SP, BRAZIL.
Institute for Space and Astronautical Sciences, JAPAN.

Received: June 6, 1998; accepted: January 10, 1999.

RESUMEN

Se proponen tres experimentos de diagnósticos de plasma conocidos como PLASMEX para investigar el fenómeno de las burbujas de plasma ionosféricas que se sabe existen en la región ionosférica en un amplio rango de latitudes. Se intentarán hacer mediciones de la densidad de la temperatura y la dimensión espectral de las irregularidades del plasma usando una sonda de capacitancia de alta frecuencia, una sonda de langmuir para medir el perfil de densidades electrónicas y la distribución espectral de las irregularidades del plasma y una sonda de temperatura de electrones para medir la temperatura cinética de los iones atmosféricos.

PALABRAS CLAVE: Satélite, plasma, experimentos diagnósticos.

ABSTRACT

A set of three plasma diagnostic experiments, known as PLASMEX, are planned to investigate ionospheric plasma bubbles in the ionospheric region. We propose to measure the density, temperature and spectral distribution of irregularities of plasma using (1) a High Frequency Capacitance Probe for measuring the plasma density, (2) a fixed-bias Langmuir Probe for measuring the electron density profile and the spectral distribution of plasma irregularities, and (3) an Electron Temperature Probe for measuring the kinetic temperature of the ionospheric electrons. Details of the experiment and acquisition and processing systems are presented.

KEY WORDS: Satellite, plasma, diagnostic experiments.

INTRODUCTION

The PLASMEX experiments are proposed to investigate ionospheric plasma bubbles, known to exist in the ionospheric region over a wide range of latitudes. It is intended to make measurements of the density, temperature and spectral distribution of the irregularities of the plasma using the following experiments.

1) High Frequency Capacitance Probe for measuring the plasma density.

2) Fixed bias Langmuir Probe for measuring the electron density profile and the spectral distribution of plasma irregularities.

3) Electron Temperature Probe for measuring the kinetic temperature of the ionospheric electrons. (This probe will be fabricated in collaboration with the Institute of Space and Astronautical Science - ISAS, Japan).

EQUIPMENT DESCRIPTION

The general block diagram of the PLASMEX experiment package is shown in Figure 1. The different packages or experiment modules are represented in this block diagram.

High Frequency Capacitance Probe

The sensor electrode of the HFC experiment is used as a capacitance element in the tank circuit of a “Clapp” type oscillator. The capacitance varies with the electron density along the trajectory of the satellite, varying the frequency of oscillation of the oscillator that is measured on board the satellite. From the change in the oscillator frequency it is possible to determine the number density of electrons.

Langmuir Probe

A metallic sensor, in the form of a sphere of about 60mm diameter is mounted on a short boom at the extremity of an-

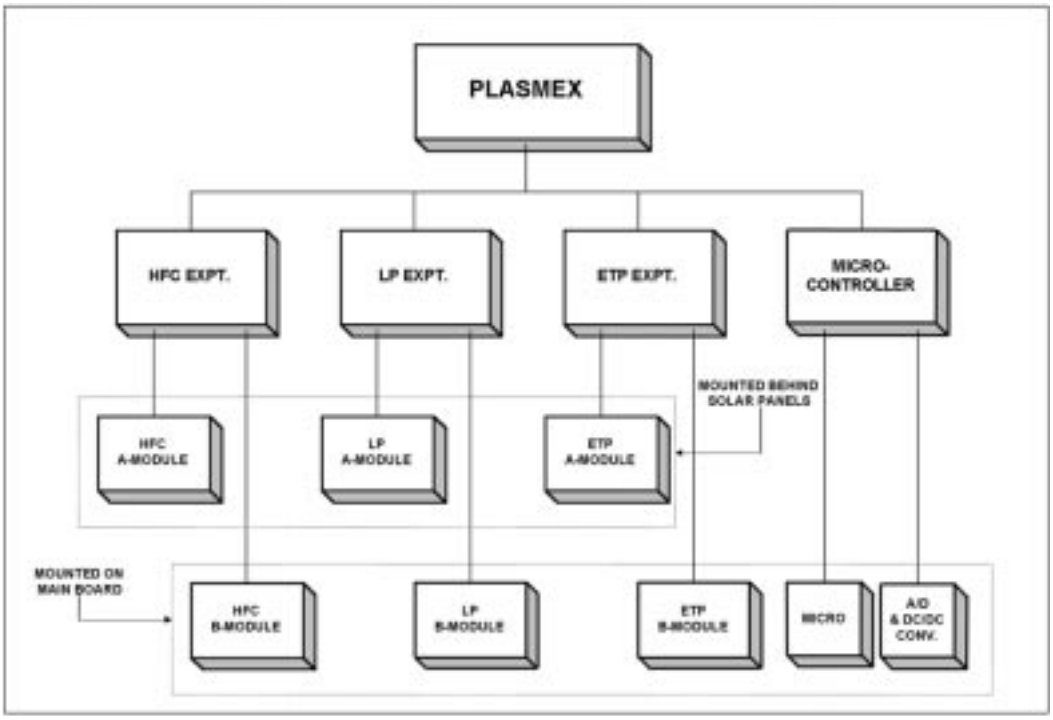

Fig. 1. General Block Diagram of PLASMEX.

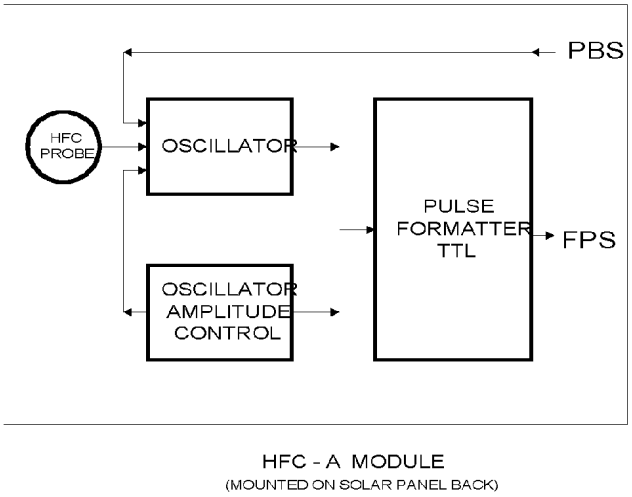

Fig. 2. The HFC MODULE-A, showing the oscillator, its amplitude control unit and the pulse formatter.

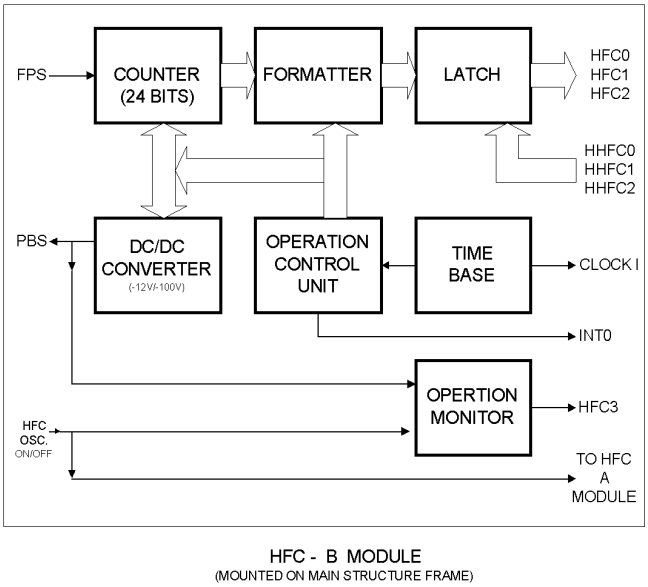

Fig. 3. HFC MODULE-B block diagram.

other solar panel. The current of electrons and ions collected by the sensor depends very much on the geometric form of the sensor, the potential applied to the sensor, the physical characteristics of the ambient plasma and the sensor speed. The sensor can be maintained at the ambient plasma potential or at a negative potential to collect predominantly positive ions or at a positive potential to collect predominantly electrons. In the present case the sensor potential will be selected using commands, from four predetermined values namely -1V, 0V, +1V and +2V.

Electron Temperature Probe

In the Electron Temperature Probe the current-voltage

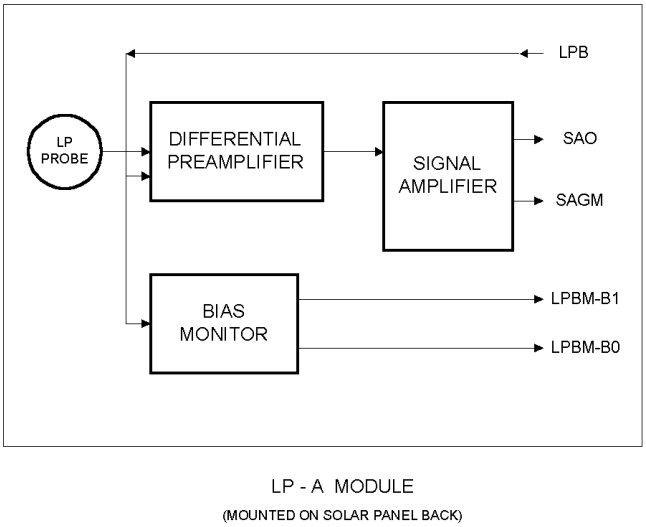

Fig. 4. Block Diagram of the LP MODULE-A.

characteristic curve of a conventional Langmuir probe is deformed by superposing an rf potential over the potential applied to the sensor. An rf signal with two amplitudes is applied alternately superposed on a constant sensor potential and the deviations in the I-V characteristic curves introduced by the rf signal are measured in terms of the variations in the current collected by the sensor. The ratio R between the two deviations corresponding to the two amplitudes is used to determine the electron temperature.

The PLASMEX experiments namely the HFC Probe, Langmuir Probe and the Electron Temperature Probe will be operated by commands from an onboard Micro-controller. The specific commands needed to change the operational modes of the experiments will also be provided by the Micro-controller. The Micro-controller will also take care of the data transfer from the experiments to the OBC (On Board Computer).

MECHANICAL DIMENSIONS AND INTERFACE

The exploded view of the SACI-1 satellite showing the location and mounting of the scientific experiments includ-

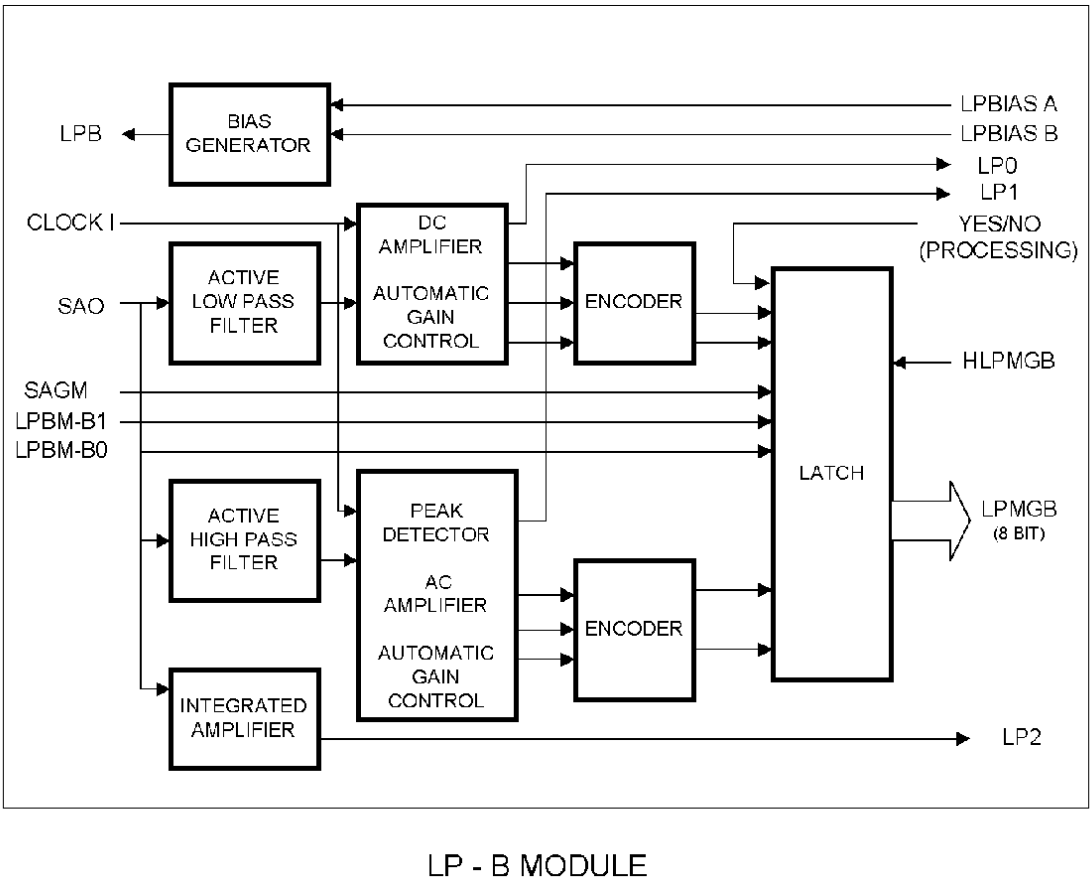

Fig. 5. Block Diagram of the LP MODULE-B.

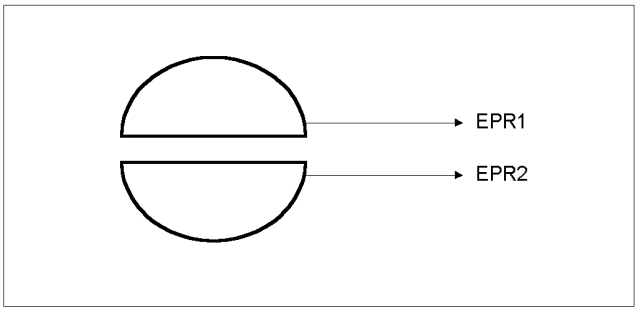

ETP - A MODULE (PROBE)

Fig. 6. ETP MODULE-A Showing the ETP Sensor.

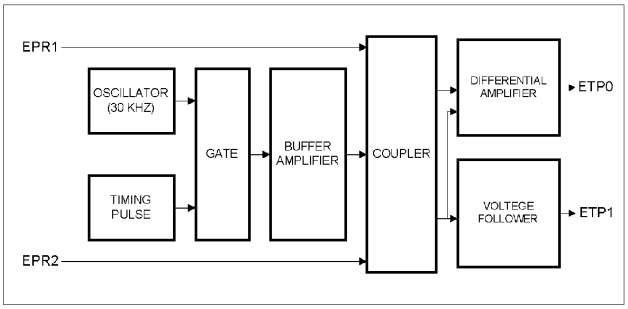

ETP - B MODULE

Fig. 7. ETP MODULE-B Block Diagram.

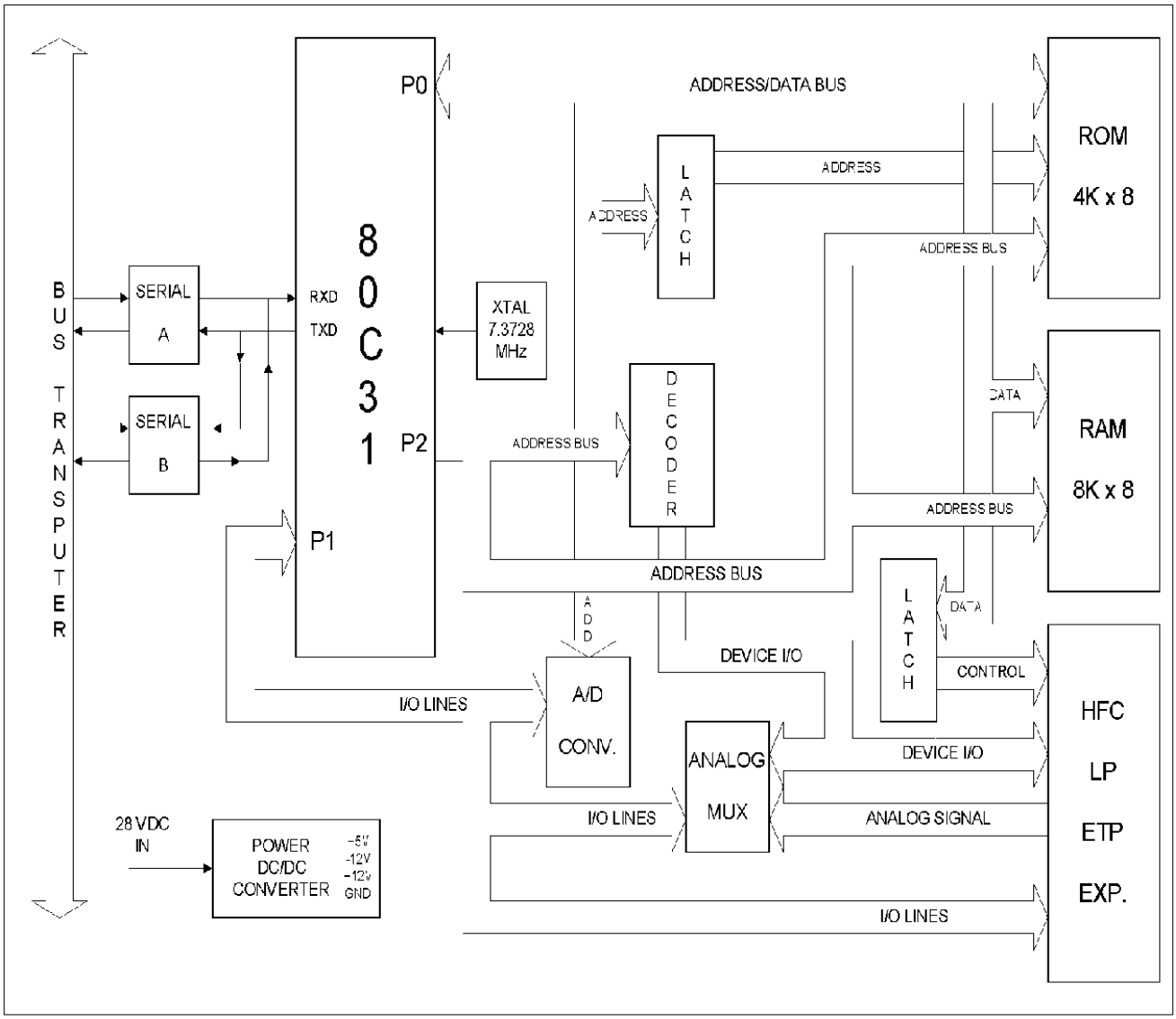

MICROCONTROLLED INTERFACE BLOCK DIAGRAM

Fig. 8. Microcontroller Block Diagram.

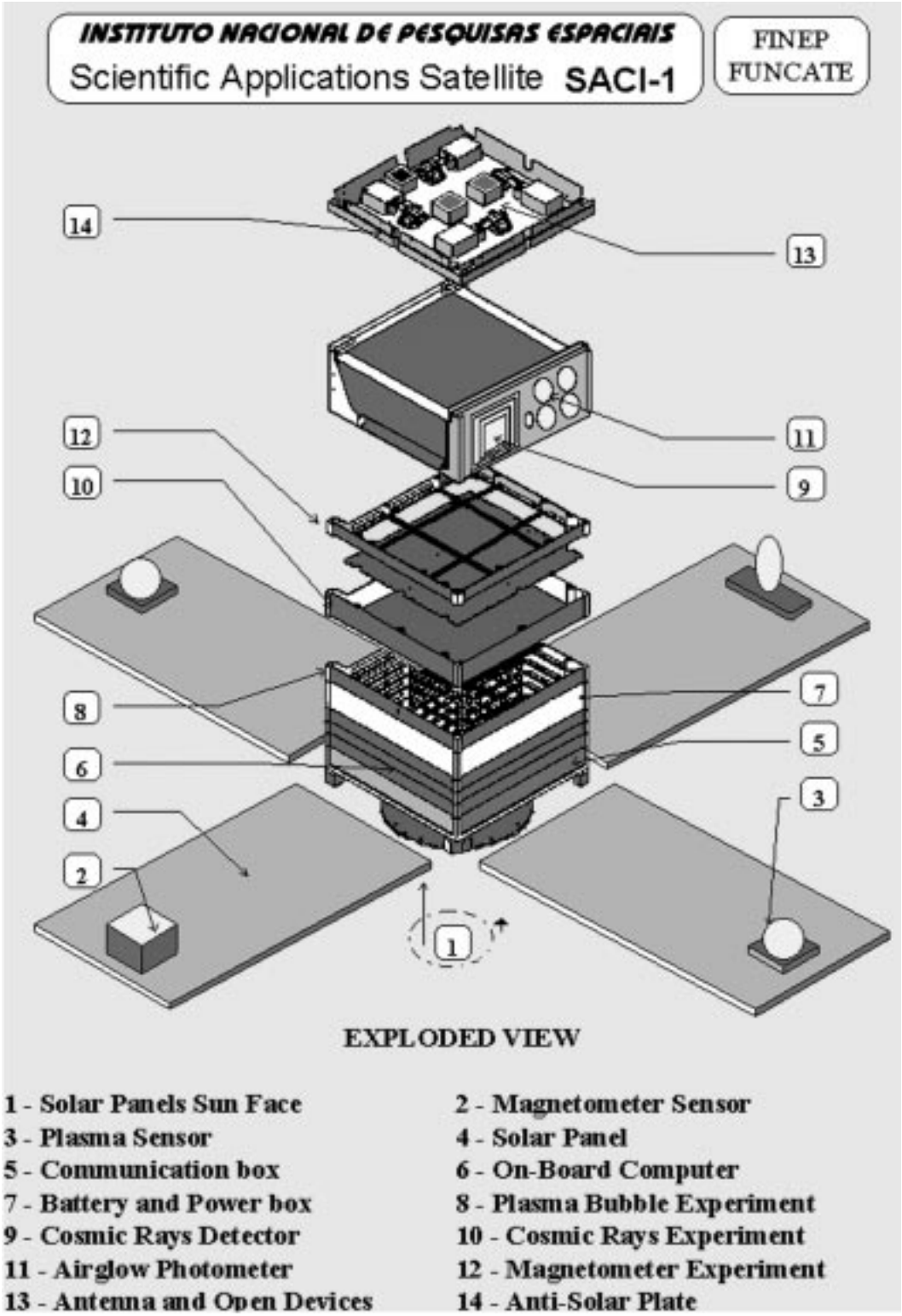

Fig. 9. Exploded View of SACI-1 Satellite showing the Location of the Scientific Experiments.

ing the PLASMEX is shown in the Figure 9. As can be seen from the figure, the A Modules of the HFC, LP and ETP experiments that contain the sensor and associated front end electronics are mounted behind three solar panels at their extremities to reduce interference from fluctuations in the satellite body potential.

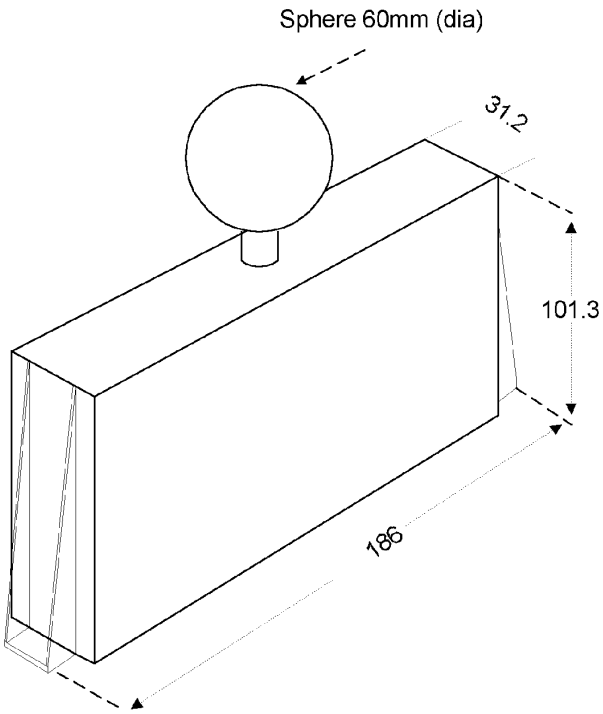

Fig. 10. Mechanical dimensions of Module A of HFC and LP Experiments.

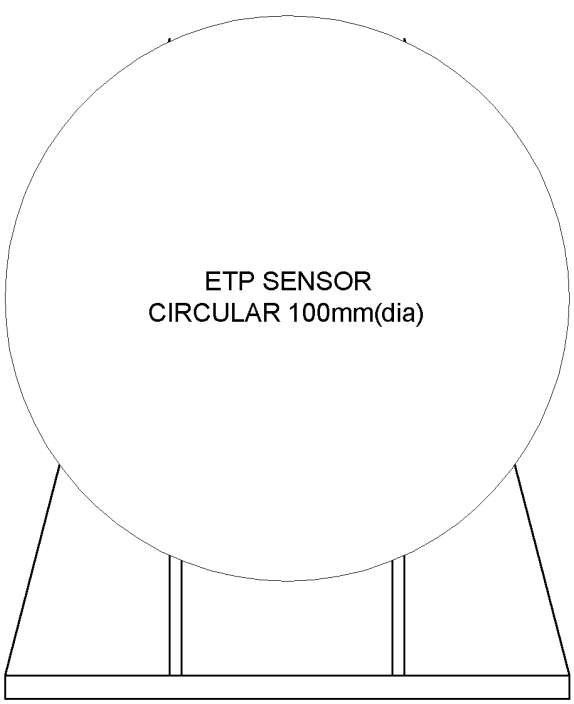

Fig. 11. ETP Module A dimensions.

ESTIMATED VALUES

PLASMEX		VOLTAGE (V)	CURRENT (mA)	POWER (W)	TOT./EXP. (W)
HFC	SENSOR (MA)	+12	30	0,360	
		-12	20	0,240	
	MB	+12	30	0,360	
		+5	125	0,625	
		-12	20	0,240	
LP	SENSOR (MA)	+12	30	0,360	
		-12	20	0,240	
	MB	+12	70	0,840	
		-12	30	0,360	
ETP	SENSOR (MA)	—	—	—	—
		—	—	—	—
	MB	+12	20	0,240	
		-12	20	0,240	
ECI	MB	+12	25	0,300	
		+5	200	1,000	
		-12	25	0,30	
					5,70

HFC and LP Module A

Dimensions of the Module A of the HFC and LP experiments are shown in Figure 10. The HFC and LP sensors are two identical gold plated metallic spheres of 60mm diameter.

ETP Module-A

Dimensions of the Module A of the ETP experiment is shown in Figure 11. The ETP sensor is a circular printed circuit board and is separated into two semi circular sensors by removing the metallic part of the printed circuit along a diameter. The sensor has a diameter of 100mm.

The main electronics system containing the Module- B of the HFC, LP and ETP experiments and the Micro controller is mounted on a single printed circuit board and attached to a metallic frame (satellite segment) of approximate dimensions 345x365mm^2.

ENERGY BUDGET

The PLASMEX experiment power consumption is given in the table below. The values given are the estimated ones, but are very close to the measured ones. The total power consumed by the experiment is about 5.7 Watts.

MASS BUDGET

The PLASMEX experiment modules have the following measured masses and the total mass is within the expected value.

HFC Module-A	0,589kg
LP Module-A	0,575kg
ETP Module-A	0,093kg
Main Board	1,220kg
Total	2,477kg

LAUNCH SCHEDULE

The SACI-I microsatellite launch is presently scheduled for the middle of 1999, from the Satellite Launching Center in China. This will go along with the CBERS satellite, scheduled for launch on board a Chinese Long March rocket.

ACKNOWLEDGMENTS

The authors are grateful to the Brazilian Academy of Sciences and the Brazilian Space Agency for selecting the PLASMEX experiments for launch on board the SACI-1 satellite and for the approval of financial resources for the development of the experiments. The work reported here was partially supported by FINEP under contract FINEP-537/CT, and by CNPq under process 300253/89-3/GM/FV.

P. Muralikrishna, M.A. Abdu, J.H.A. Sobral and Koh-Ichiro Oyama

Instituto Nacional de Pesquisas Espaciais - INPE/MCT, C.P. 515, 12 201-970, São José dos Campos-SP, BRAZIL.

Institute for Space and Astronautical Sciences - ISAS JAPAN.